WESTERN UPDATE #62

THE WESTERN NEWSLETTER FOR MF, LF, AND VLF EXPERIMENTERS

Available for business-size 25 cent SASE's, plus 60 cents per issue (or $7 per year)
from: Jim Ericson, 226 Charles St., Sunnyvale, CA 94086-6063

ACTIVE WESTERN BEACON STATUS (LIST COMPILED January 25, 1989)

FREQ(kHz)	IDENT	QTH	SKED INFO
163.80	FPV	Granada Hills, CA	24h/7d. See alt. freq. 182.62 kHz.
163.88	M	San Diego CA	24h/7d.
164.00/167.0	JKS	San Anselmo, CA	On sometimes. Sked unknown.
164.89	T	Sunnyvale, CA	24h/7d. A2 modulation (+/- 775 Hz).
166.503	C	near Morro Bay, CA	24h/7d.
167.25	AHN	Fallbrook, CA	24h/7d.
169.96	NRE	San Diego, CA	24h/7d
170.40	B	San Ysidro, CA	24h/7d
175.225	MAX	Wheatland, WY	24h/7d CW. BPSK/ASCII by request.
175.703	FAW	Orem, UT	24h/7d.
176.00	HDOMBAY	Morro Bay	24h/7d.
176.26	CO	Glenwood Springs, CO	24h/7d.
176.75	SR	Elgin, OR	24h/7d.
176.85	7FS	Belfair, WA	24h/7d.
177.49	UCP	Saratoga, CA	Daily, approx. 1400 to 1700 UTC.
179.0	MPM	Salt Lake City, UT	24h/7d. ASCII/CW alternating 5minutes.
179.54	WJ	Simi Valley, CA	24h/7d.
180.224	F	Los Banos, CA	FSK. By request.
180.80	XU	Sioux Falls, SD	24h/7d. BPSK/CW alternating 5 minutes.
181.17	IZJ	San Gabriel, CA	Daily. Silent 0700 to 1100 UTC.
181.287	MEL	San Jose, CA	24h/7d.
181.682	ISUN	Durant, OK	8-10am, 8pm to midnite CST, 7 days.
182.62	FPV	Granada Hills, CA	24h/7d. See alt. freq. 163.80 kHz.
182.672	G	Palo Alto, CA	24h/7d.
182.88	H	Descanso, CA	24h/7d. Note QSY.
183.160	PRK	Saratoga, CA	24h/7d.
183.63	PLI	Toluca Lake, CA	24h/7d.
184.016	EK	Sunnyvale, CA	Intermittent.
184.32	N3S	Mocksville, NC	Intermittent tests.
184.39	HO	Pahoa, HI	See text.
184.43	V	Forestville, CA	24h/7d., but remote xmtr may be broken.
184.80	dashes	Mountain View, CA	24h/7d.
185.0	ZYK	Redway, CA	24h/7d.
185.00	AU	Champaign, IL	0100 to 0600 UTC, 7 days.
185.49	AZ	Tucson, AZ	24h/7d.
186.80	BA	Lancaster, IL	24h/7d.
187.0	ELU	Simi Valley, CA	24h Saturday and Sunday on SSB.
187.252	TEXAS	NW of Ft. Worth, TX	24h/7d.
187.30	UPN	Cincinatti, OH	Occasional.
187.50	DCH	Berlin, MD	24h/7d.
187.50	J	Los Angeles, CA	24h/7d (back on the air).
187.59	SM	San Jose, CA	24h/7d.
189.84	R	Nevada Test Site	24h/7d. Previous ident was NTS.
190.4	OHH	Richmond Hill, Canada	Occasional testing.
514.127	U	9 mi. NW San Simeon, CA	24h/7d. Mike Mideke.
530.+/-.76	T	Sunnyvale, CA (WA6AJY), A2 mod 24h/7d. Ed Gelinas. Simulcast with T at 164.89 kHz.	
1685.15	SS	San Rafael, CA	24h/7d. Steve McGreevy.
1687.28	D	Descanso, CA	6PM to 6AM PST every day.

Non-Western listings are beacons currently being copied in the West, or they have SASE's on file with us.

2 MORE SASES ON FILE

HZ 09

EK NOTES: If you read the banner on this issue you'll note that the reference to "1750 Meters" is gone. It seems that in addition to 1750 Meter activity, more experimenters are working with Medium-Frequency Part 15 installations, and a few are dabbling in LF/VLF. Maybe this will legitimize more articles on the subject.

To many LowFER listeners the winter season has been blah as far as DX is concerned. Whether this is due to the increased solar activity...nobody really knows. However, dogged listeners have still produced some spectacular results. To wit: **Sheldon Remington** copied the **C** beacon (**Cliff Buttschardt**, Morro Bay, CA) in Hawaii on January 6th UTC. Sheldon also copied **Frank Cathell's H2** beacon on December 25th UTC. That's better than 2300 miles, and that makes a total of three California beacons heard by Sheldon in two seasons. According to a postcard sent to Cliff by Sheldon, it took him **30 nights** of listening before he finally caught C and H2. Sheldon uses a long beverage and a 25Hz filter.

Incidentally, Sheldon wrote us a letter on 12/8, just days after we published WU#61. So we were unable to report that his **HO** beacon is back on with a partial (not 24 hour) schedule. It basically runs when Sheldon is away on Mauna Kea doing astronomy work. Entirely solar powered, running exactly 1 watt input to a 26 foot umbrella vertical, HO cranks away on 184.39 kHz. It's very slow CW and is subject to random keying defects. At one time it was known to be sending "**EE BT**". The best guess (without new input from Sheldon) is that the HO beacon will next run 24 hours a day between February 9th through the 14th.

At least 12 LowFERS spent the night of Friday, January 20th glued to their radios in an attempt at the **first transcontinental LowFER message relay** from New Jersey to San Diego! While Mother Nature tricked us with some very un-winterlike crummy propagation, everyone involved had a delightful experience anyway...thanks to the organization of **Carl Lundgren (TH,** New Jersey). The plan was to send a short message from New Jersey (**TH**) to **WI** (Maryland), then to **KRY** (Ohio), **9HDQ** (Indiana), **BA** (Illinois), **8LXJ** (portable in Kansas), **R** (Dave Stinson in Nevada), **H** (Frank Cathell east of San Diego), and finally to **NRE** (Steve Meyerpeter in San Diego). Then a short message was to be sent in reply back along the same route. Nevada and California stayed in continuous contact from 8 to nearly midnight on 3777 kHz sideband, while there was some parallel communication between California/Nevada and the east on 40m CW. The San Diego to Nevada LowFER link was open throughout the evening, but after 9pm PST, conditions were so bad back east that LowFER signals weren't making it 200 miles! **Mike Mideke** had raggedy copy on **8LXJ** (Kansas) around midnight, but by then everybody had pooped out. Let's hope that Carl gives another shot at organizing an attempt at this. It was fun!

MAILBAG. **Brice Anderson (BA)** reports, "Thunderstorms in the midwest and south have been rough on LF listening. QRN is terrific. Is this Winter? I continue to hear many beacons through the noise: **DCH, KRY, QYY, TH, UPN, WI, XR, YHO, ZMK, 8LXJ, and 9HDQ.** I hear traces of **ABC** (SC) and **3OHH** (Canada). I was heard by **QYY** in PA and **Bob Null** in NC."

Bob Costa of Redwood Estates, CA recently splurged on a new TS-930S and wants to sell the following gear: FT101B with speech processor, new driver and PA tubes. An FV101 external VFO. An FTV250 2m transverter. Yaesu phone patch. An external speaker. A Shure 444 desk mike. A Bearcat DX1000 SW Receiver (10 kHz to 30 MHz). All in exceptional condition. Bob will consider trades, or make him an offer PO Box 600, Redwood Estates, CA 95044.

Scott Mawhinney (295 Pettis Ave., Mountain View, CA 94041) is looking for a WRR-3 VLF communications receiver (14 to 600 kHz). Anything from a junker, to one in mint condition, will be fine!

Cliff Buttschardt (950 Pacific St., Morro Bay, CA 93442) still has a bunch of new NE602's. Price is two for $5.

Mark Mallory (MPM) was visiting Southern California on January 1st and DF'd **Frank Cathell's H** beacon. He wound up with a guided tour, and a free dinner for his trouble!

Gary Waldsmith (SUK/K4SUK) writes, "Have been picking up **R** at 189.4 kHz each night S9+, but what is the **"49"** beacon on about 187.6 kHz? Have new 1000 foot+ longwire up from hilltop to hilltop of new QTH. Nothing else yet in the way of transmitter or tuner. Please note my new address: 1441 Hound Hollow Road, Pilot Hill, CA 95664...near Sacramento." (Ed. note: The San Jose **SM** beacon on 187.59 was running pro-49'er messages the week of the big game!).

Steve Martin wrote from South Carolina to say that he recently got a promotion to Lieutenant Commander! Steve is the editor of the **ON THE AIR** column in **THE LOWDOWN**. Congratulations, Commander...sir!

Dave Holland (DCH) says, "For the MAILBAG, DCH's main xmtr is back on line with all Litz wire coils, and has been heard in Canada by **Herb Balfour**. A new EPROM IDer has been constructed and is operational. Also, a medium frequency beacon is in the planning stage. I enjoy the **WU** as well as the **Northern Observer**, and have learned a lot since getting into LF. I can really get some arguments started with the local appliance operators."

Bob DeVaughn (Pennsylvania) is listening with a longwire and a Burhans converter, but so far only is hearing a few NDB's. An active whip is next for Bob. When he starts hearing LowFERS he plans to put up a beacon.

Steve Ratzlaff (Sunnyvale, CA) writes, "Back from some good listening in Tucson. Heard **R** and **H** most nights, and of course **AZ**. No others. Lots of good NDB's."

Chip Owens (**Q**, Colorado) laments, "I've been listening during the Christmas-New Year week for LowFER beacons. No results yet...not even **MAX**! Will work on receive antenna...perhaps try an active whip.

I received a nice offer of help on publishing the **Western Update** from **Ron Jones** in Utah. Unfortunately, it's more trouble "sub-contracting" the mailing/stamping/SASE chores than it is to do it myself. The most important thing that you, the reader, can do is to submit material and current information about your activities. Thanks, Ron!

Ev Paschal checked in and notes, "I've moved from Menlo Park to the Pacific Northwest. We're not actually living on Sinclair Island, but have rented a house in Anacortes for the winter. Until end of May my address is 2005 K Avenue, Anacortes, WA 98221, tel. (206) 293-8176. The Sinclair Island location is terrific for VLF work. The level of powerline hum is almost nil. I've heard whistlers and chorus using a portable broadband VLF receiver and a 57cm square loop."

Chris Spencer wrote from Utah saying, "**FAW** was down for about 2 weeks. A snowstorm knocked down a mast. **MPM** was also off temporarily due to hardware problems. By the way, Medium Frequency (MEDFER) operation looks interesting. I think I may get involved with it sometime." (Ed. note: A couple MEDFER beacons in California are being heard solidly via nighttime skywave at 500 miles. Also, Note the transmitter article by **Steve McGreevy** in this issue).

Ed Gelinas (Sunnyvale) runs a LowFER beacon **T** which simulcasts on MEDFER frequency 530 kHz (A2 modulation). He sent along some photocopies of pictures showing his setup. Later in the year we'll try to get over to Ed's QTH and take some photos for a **WU** article. Ed's antennas are truly works of art! Ed is finishing up an extensive ground system in the backyard of his small city lot. When he's done, he'll have 120 ground radials!

Jay Coote (**J**, Los Angeles) wrote to report that, "**J** is back on the air. The format is J with 1-2 second spaces. The beacon uses **Mideke's** CD4060 Osc, but with IDer from the **QZL** transmitter. Cathell's 2 transistor buffer for the CD4060 helps improve efficiency and output. The PA is a single IRF511 followed by a symmetrical PI filter. The loading coil is a 1.5 inch form tuned by a 12 inch ferrite rod. The antenna is a 30 foot push up with a tophat of 6 drooping 10 foot guys. Ground system is a combination of 10'x15' wire mesh, radials, and the odd connection of my chainlink fence."

BURHANS ELECTRONICS

161 Grosvenor St.
Athens, OH 45701

January 1989

Many bench and field tests during the past year have resulted in some improvements in upconverter and loop preamplifier circuits, the VLF-90 upconverter and the H-90 loop preamp. The VLF-90 has performance like the VLF-87 but with some circuit board and parts changes.

The H-90 preamp is revised with a 1:1 input transformer for use with multi-turn loops but can also be used with other input transformers for the previous single turn loops. In general the multi-turn loop technique will have improved sensitivity over the single turn loop when the input transformer and loop winding are properly matched. The H-90 preamp also uses a power MOSFET output line driver with direct load coupling to the output receiver coupler circuit or converter for lower noise performance.

Experimenters who obtained the H-86 loop preamp using the 2N3904 output driver transistor may find that replacing this transistor with a VN2222L, 2N7000 or BS170 VMOS will result in lower noise and improved sensitivity. In this case the MOS GATE is the Bipolar BASE, the MOS SOURCE becomes the Bipolar EMITTER, and the MOS DRAIN becomes the Bipolar COLLECTOR terminal; all with the same bias resistors on the original H-86 circuit board. Those who are on my mailing list records as having purchased the previous H-86, can obtain a replacement VN2222L by sending me two 25 cent stamps, if you cannot find a similar VMOS locally. The VN10KM small power VMOS will also work in the H-86 circuit or the newer H-90 board.

"H" NEWS FOR WU #62 - by Frank Cathell, Box 535, Descanso, CA 92016.

Well, the Santa Ana winds blew the H2 lowfer antenna down for the third and final time last month. This beacon is now off the air for good and the "H" beacon has been QSYed up to the H2 frequency of 182.88 Khz. The former "H" frequency of 166.667 Khz was vacated to avoid GWEN interference. The remote H2 antenna site, ground system, and "birdhouse", however, have been utilized for a 100 mW, Part 15 "Medfer" beacon on 1687.28 Khz which sends the single letter "D". The groundwave coverage hardly makes 10 miles but Jim (EK), Mike (Z2) and Cliff (HDO) copied the nightime skywave within one week of installation. The transmitter circuit (shown below) is similar to the Mideke "simple beacon" circuit with the Cathell/Mallory modifications to improve efficiency. The 2N7000 mosfet drain tank circuit tuning is somewhat critical if maximum efficiency and minimal harmonics are expected. The 4017 IDer circuit can be modified to send other letters as indicated in past copies of the WU.

In other matters Steve Meyerpeter (KG6BY, lowfer NRE) and I have been doing some extensive experiments with optimizing low frequency active whips, especially the LF Engineering L-400B and the J-FET (J-310) version of the Burhan's A-86 active whip. The results of these experiments will be published in a later WU.

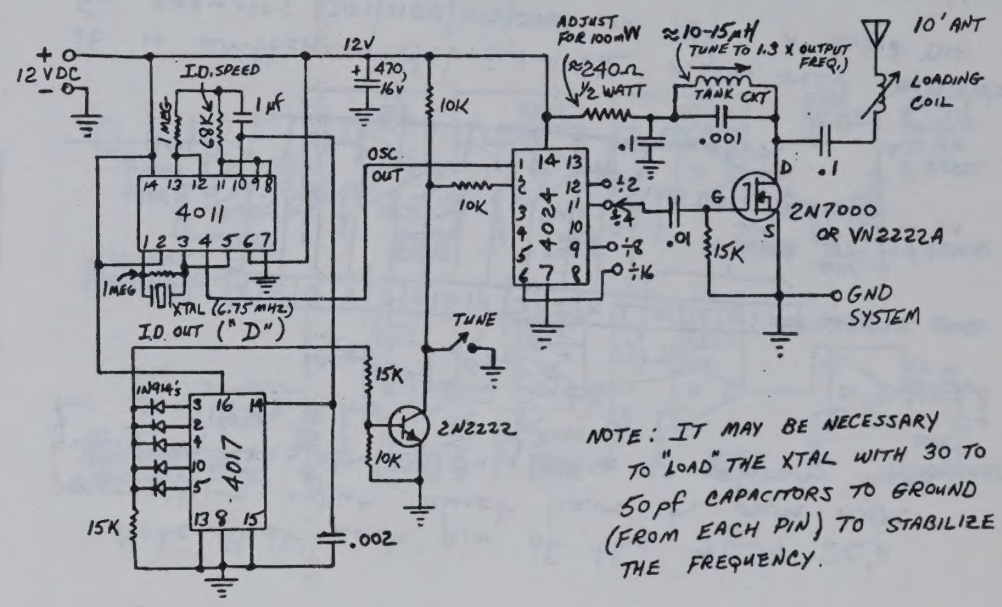

NOTE: IT MAY BE NECESSARY TO "LOAD" THE XTAL WITH 30 TO 50pf CAPACITORS TO GROUND (FROM EACH PIN) TO STABILIZE THE FREQUENCY.

ULF/VLF/LF FREQUENCY SYNTHESIZER

by: Rick Wright

1SUN

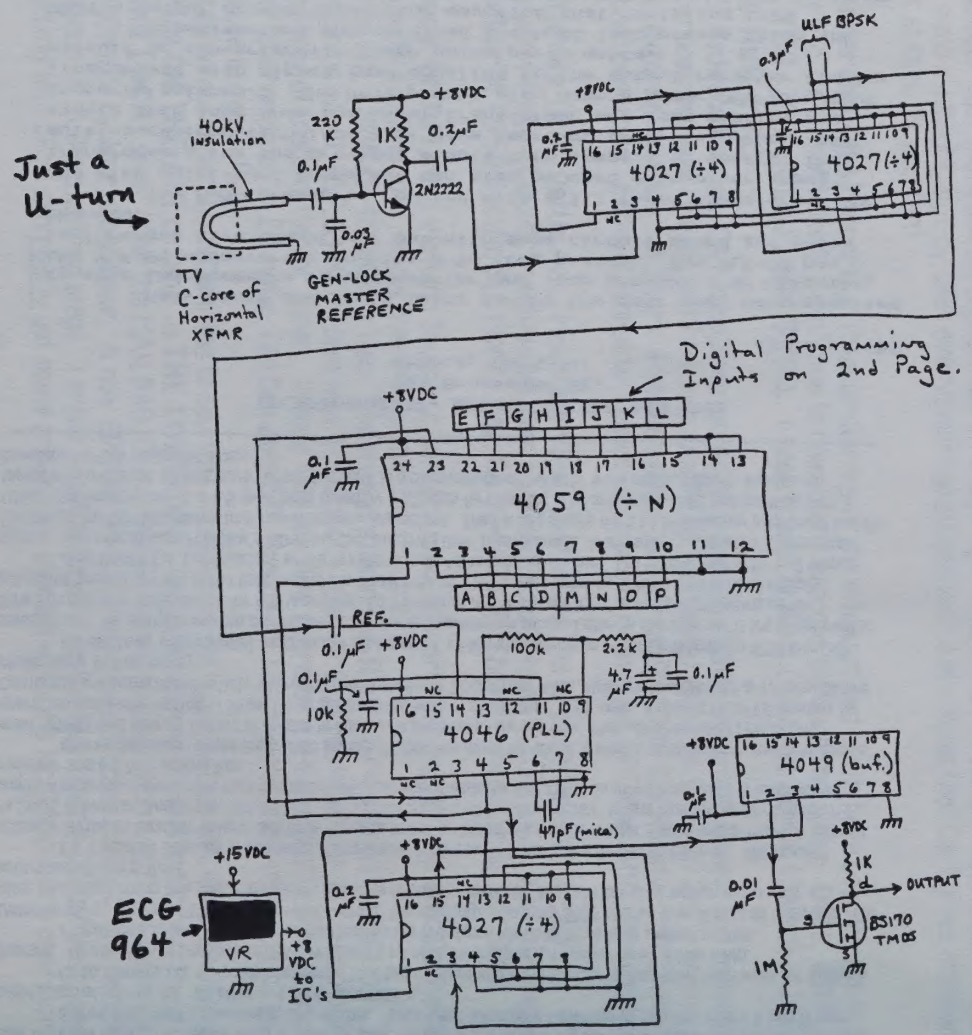

Note that each pin of the 4059 IC's programming input must have its own 100K grounding resistor. Only one is shown here for simplicity:

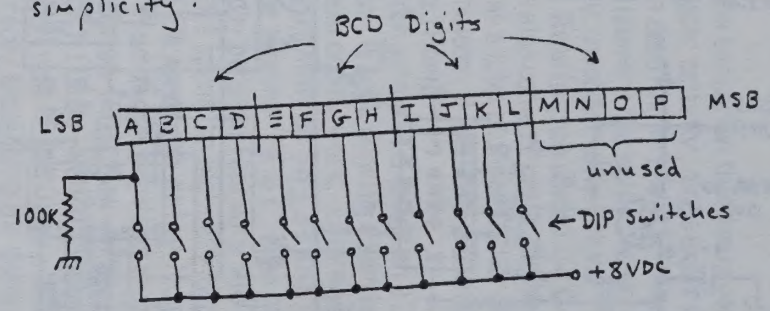

It is written in Hebrew – the digits read backwards. For example: 1001|1100|1110|0000 is 739. A closed DIP switch means "1".

Editors note:

1. Rick says this is mostly Max Carter's design, except for the reference frequency and output parts. 1SUN runs with digital 739, or 181.682 kHz...exactly that on the counter.
2. Re-read Rick's comments about stability in MAILBAG (page 2) of WU#61.
3. The 4059 chip is a programmable divide by "N" counter, and is available for $3.95 from Jameco, 1355 Shoreway Road, Belmont, CA 94002. Tel. (415) 592-8097.

AN EFFECTIVE AUDIO FILTER FOR LOWFER LISTENING

Cliff Buttschardt W6HDO
955 Pacific St.
Morro Bay, CA 93442

So many audio active filters have been used by LOWFER listeners, that only one which has been built and tested repeatedly would attract any attention. In the West, many have constructed what has been called the W6HDO filter but in reality is a design from a excellent text by WILLIAMS, "Electronic Filter Design Handbook" published by McGraw.

This engineering textbook illustrates applications in which the amount of ringing can be predicted for any given value of Q. With required narrow bandwidths needed in LOWFER listening, the 3 section transistional gaussian 6 db minimum ringing filter was examined. A center frequency of 500 Hz was chosen since at the time, coherent CW techniques were being used. This filter has one real pole and two imaginary poles which means that one section is tuned to 500 Hz while the others tuned slightly higher and lower than the center. Frequency translation is not difficult, requiring changing of resistor values by the ratio of new to old, keeping the 0.1 uFd capacitor value.

With the exception of multiturn pots, all resistors are nearest one percent values. The pots are then tuned to given frequencies so that accumulated errors become cancelled. Naturally, the closer one gets to the target the more effective the filter becomes. Fortunately, the 0.1 uFd capacitors do not need to be exact but matched in pairs. Ordinary Radio Shack blister pack mylar capacitors are fine. Probably 15 caps will be required to get six balanced units. Some builders simply solder in units directly claiming the simiarity is good enough. Of ten or so filters built to the original design, the 3 db bandwidth is about 35 Hz. As with most active filters the window broadens rapidly after 30 db.

Adding an additional three op amps and tuning to two different imaginary frequencies will broaden the center passband and improve the skirts. The first set of filters are tuned to 480, 520.8 and 500 hz. The second set is tuned to 489.6, 510.6 and 500 Hz. Each can be peaked in any order since there is nearly no interaction, but be careful to set frequency using a counter and tune accurately! A pulsed 500 Hz square wave will result in a smooth 16 mSec rise time with ten percent over and undershoot and no additional ringing.

Construction of the illustrated 6 section filter is simple and can be done on a 0.1 inch prepunched board. A multiturn pot should be used with a series resistor to make tuning easier. Preset each combination to 100 ohms initially. Be sure to mark each multiturn pot with the target frequency noting that ONLY ONE FREQUENCY IS CORRECT FOR A GIVEN SET OF ONE PERCENT RESISTORS! In the past this has been a major problem. Many different low noise op amps can be used. Choose units containing two amplifiers per chip as four amps in one package produces unwieldy component layout. The last stage is a broadband audio amp simply because it was unused at the time but makes a marginal headphone amplifier. This output works well as a driver for a recorder. An external audio amp works far better for listening. Be sure to put a LARGE (470 uFd or more) capacitor on the last chip from pin 4 to 8 with short leads. Both the input and output connections benefit from ferrite beads if any local RF fields are present. The unit can be driven from a headphone output of an existing receiver. Enclose the battery and amplifier inside a metal case if at all possible. When a low voltage single supply is used such as nine volts, static crash volume and GWEN signals are tolerable rather than excruciatingly loud since the output is internally limited.

Frequency-amplititude plots have been omitted for the simple reason that they are difficult to graph without a synthesized audio signal generator. Listening tests are more important and have proven to be most satisfactory. Try this simple project to appreciate the results of a few parts, your personal effort and simple construction.

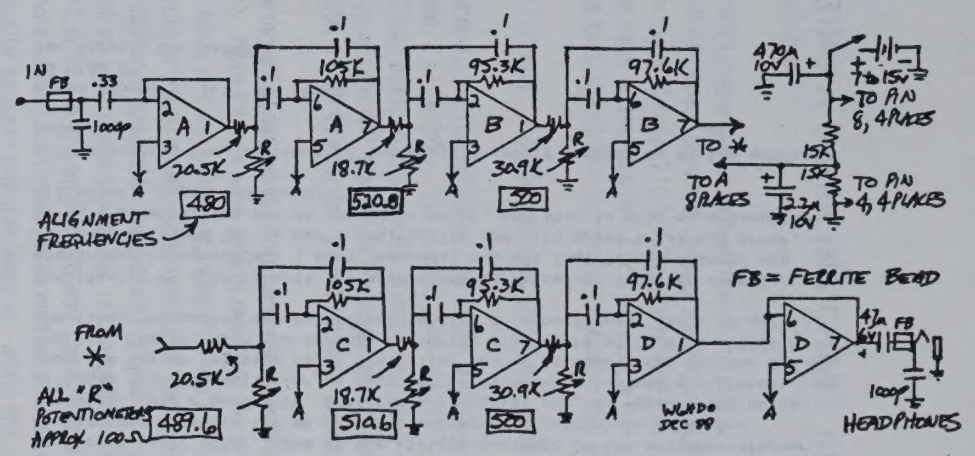

A "MEDFER" TRANSMITTER

by Steve McGreevy

Figure 1 is a schematic of a simple transmitter for 1.6-1.9 MHz which I put together using parts mostly from my "junkbox" with a few exceptions (the i.c. chips). While I am not 100% satisfied with it, it has attributes which suit my purposes, especially because I can use my large collection of crystals in the 6-7 MHz range and divide their frequencies by 4 to attain the desired frequencies of operation.

I had originally written a large, three-page article describing this transmitter's functions and operations, its quirks, etc., but decided against publishing it for mass distribution because I think a better design could be produced sans all the little idiosyncracies that plague this design, mainly in the digital i.c. chip operations. I will, however, re-copy some commentary from the unpublished article:

The oscillator/buffer output drives the 4013 CMOS dual flip-flop wired for divide-by 4. I chose divide-by 4 due to the wide availability of xtals in the 6 to 8 MHz region. These xtals tend to be cheaper on the surplus as well as new crystal markets. Xtals for the 40 Meter Amateur band can be conveniently divided down to the 1800-1900 KHz region if one desires to operate the transmitter in the 160 Meter Amateur band under F.C.C. rules Part 97.

An alternate oscillator could be the 4001 CMOS NOR-gate i.c. package, which I suspect would be more compatible with the 4013, since it is in the same "family" of CMOS chips and can be operated at the same supply voltage as the 4013 (3-18 volts). I have found that a 4001 (and a 4011, which can be directly subsituted) do not oscillate FT-243 type crystals well at all (CMOS gate impedance too high). However, the 74HC14 works well with FT-243 xtals up to about 7.5 MHz. Above 7.5 MHz using FT-243's, the 74HC14 becomes a bit "choosy", with certain xtals simply refusing to start-up. Newer FT-243's work fine, but older xtals (surplus, etc.) are questionable. I think the best way to go (especially with 4000-series CMOS i.c.'s) is with xtals designed for digital circuits. Those xtals require lower drive to sustain oscillation and don't "load-down" the CMOS i.c. as badly as FT-243's. Then, the problem may be in finding useable xtals for the 6-8 MHz range. Perhaps things may get so complicated that the best route to go is with fundamental xtal oscillators and doing away with digital dividers altogether. A two-transistor MF xmtr is certainly feasible.

The final amplifier is probably the circuit most subject to variations in design. I departed from my usual MOSFET final amp. design for 1750 Meters and the 522 KHz "SA" beacon, and modeled the "180-160 Meter" MEDfer xmtr p.a. more after HF QRP designs. The final amp shown in fig. 2 lacks the parallel LC "drain-tank" circuit (or, "collector-tank" in the case of bi-polars) so often used in our LF beacon final amps.

Final amplifiers (p.a.) employing a parallel LC tank circuit at the p.a. transistor and series inductive loading to the antenna (as in Mike Mideke's "Simple Beacon" circuit in Western Update #53 and its revision in WU # 57) will have current to the final "peak" at antenna resonance and drop off at antenna disresonance (saving the final if the antenna goes out of tune.) In the p.a. circuit in fig. 1, the opposite will occur, with the lowest collector current at antenna resonance. However, in the worst cases of antenna mismatch (output with no antenna connected and shorted output) I could muster, the current to the final amp never rose high enough to be destructive, although the transistor did get quite warm. This should not be too worrysome if the beacon is run at 100 milliwatts. However, care should be taken if the transistor is operated close to its maximum rating (poor practice.)

The power level of the final should be varied by varying the voltage to the final amp. A regulated variable-voltage power supply would be the best means, but a cruder and less flexible alternative is to use one of those plug-in universal wall-transformer/"adapters" with selectable voltages, usually from 3 to 9 or 3 to 12 volts. One of the voltage settings of the wall-transformer should come close to 100 mW when the voltage and current to final are measured. Use a good VTVM, preferably a digital one, to measure the actual voltages from the wall-xfmr as they can be as much as 1.5 volts different than what the switch settings say! The latter method is what I use for the 522.62 KHz "SA" beacon, with the voltage measuring 3.37 volts at 26.4 mA (.0264 A) on the final--computing out to 88.9 mA (Volts X Amps = power input in watts).

Admittedly, my xmtr circuit may seem crude to those who have had formal electronic backgrounds. I have had none, and all that I have learned was strictly attained "on my own", empirically and with great trial and error. Circuit possiblities are as varied as on LF, and that is what experimenting is all about. Happy medFERing!

(Those wishing the full text of the article should contact me at the address below:)

Steve McGreevy, TLX, SA, N6NKS
45 Elda Dr.
San Rafael, CA 94903

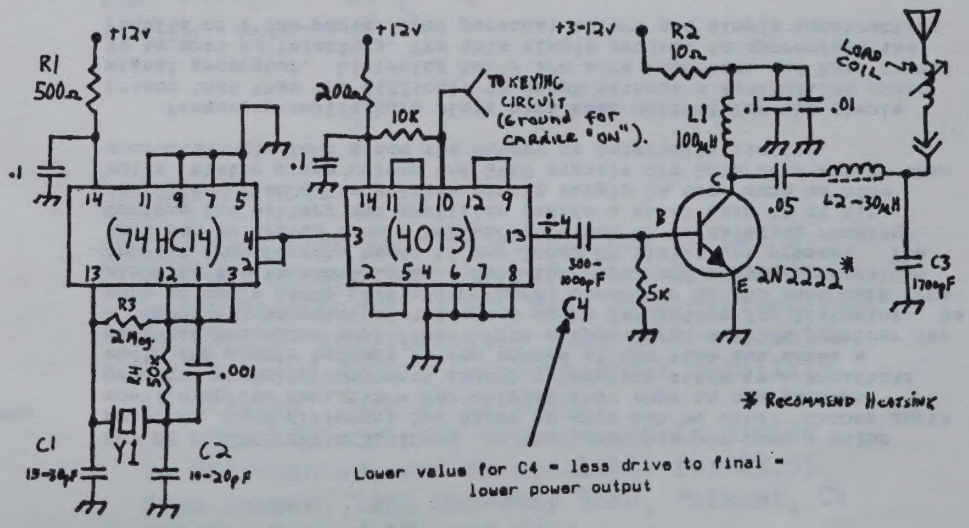

Xtal Y1: 6400-6800 KHz for 1600-1700 KHz

(160 M) Xtal Y1: 7200-7600 KHz for 1800-1900

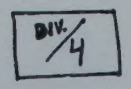

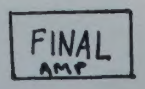

FIG 1 — MEDFER/160 METER TRANSMITTER

REV. 11/19/88 Steve McGreevy

VLF/LF PROPAGATION MONITORING USING A SAMPLING CHART RECORDER

by: Jim Ericson

Back in October, 1988 I acquired the Rustrak Model 88 chart recorder shown in the photo below. Unlike many chart recorders where an inked pen is in continuous contact with the roll of paper, this one uses a sampling technique. The paper is coated with a light wax over a dark background. The roll is driven by a simple 110 VAC clock motor. In front of the coated paper is a 1.2 VDC meter movement that has a little dimple on the back of the needle. Each second, a horizontal bar is actuated by the clock mechanism and "bumps" the meter needle so that the dimple scratches through the wax coating and leaves a tiny black dot wherever the needle happened to be.

The sample charts shown in Figures 2-5 are reproduced full size. As you can see, the chart speed is 1 inch per hour. The horizontal scale is 0 VDC on the far left, and 1.2 VDC FS.

New, the Rustrak 88 costs $279. Each roll of coated paper (good for 30 days, 24 hours a day) is $6. My local rep for Rustrak is EIL Instruments, 271 N. Mathilda Avenue, Sunnyvale, CA 94086. Tel. (408) 245-4320.

Two other experimenters (Mike Mideke and Mitchell Lee) had been working with chart recording for several months, and the idea caught my interest. I began making sample recordings of LowFER signals in the area (see figures 3 and 4). While Max Carter and the BPSK folks will probably chuckle at the thought, a chart recorder CAN be used to copy weak signals, providing the sending rate is slow enough.

Late in October 88 I switched over to continuous monitoring of a high power military signal in Silver Creek, Nebraska on 48.5 kHz using my WW-2 RBL-3 receiver (see photo). Mike Mideke was simultaneously recording the same signal. Through daily comparison of our charts via ham radio we have pretty well concluded that we correlate on being able to see propagation phenomena as they occur. Dawn and dusk effects are extremely pronounced on the charts, as well as are solar flares (and we've had LOTS of 'em in the past month!). Nighttime propagation on these LF signals is definitely dominated by skywave (see figure 5). Daytime propagation apparently is not so well understood, but is thought to be a ducting phenomena between the D layer and the surface of the earth...sort of like a waveguide. In any case, daytime solar flares correlate almost exactly with WWV reports. It's interesting to note that flare times given on the 18 minute past-the-hour WWV broadcasts represent the solar flare PEAK. The <u>onset</u> is usually several minutes earlier, while the <u>decay</u> can last an hour or more.

There are several of these high power military transmitters in the VLF/LF area. Jim Creek, WA has one at 24.8 kHz. Aldergrove, BC is on 76.2 kHz and 133.1 kHz. Beginning in January, I switched over to monitoring the 76.2 kHz transmitter, while Mike Mideke continued with 48.5 kHz. Correlation so far seems to be pretty fair as far as solar flares are concerned. Interestingly, however, flares almost always cause the 48.5 kHz signal to <u>decay</u>, while the 76.2 kHz signal usually is <u>enhanced</u>. Mitchell Lee will probably develop some data on this point since his computer is set up to switch his Yaesu 757 receiver rapidly back and forth between two different frequencies. This allows him to do two graphs simultaneously on one recorder.

Obvious future opportunities in chart recording include attempting to correlate what we see on the charts to what we hear on other parts of the spectrum (LowFERS, NDB's, etc.).

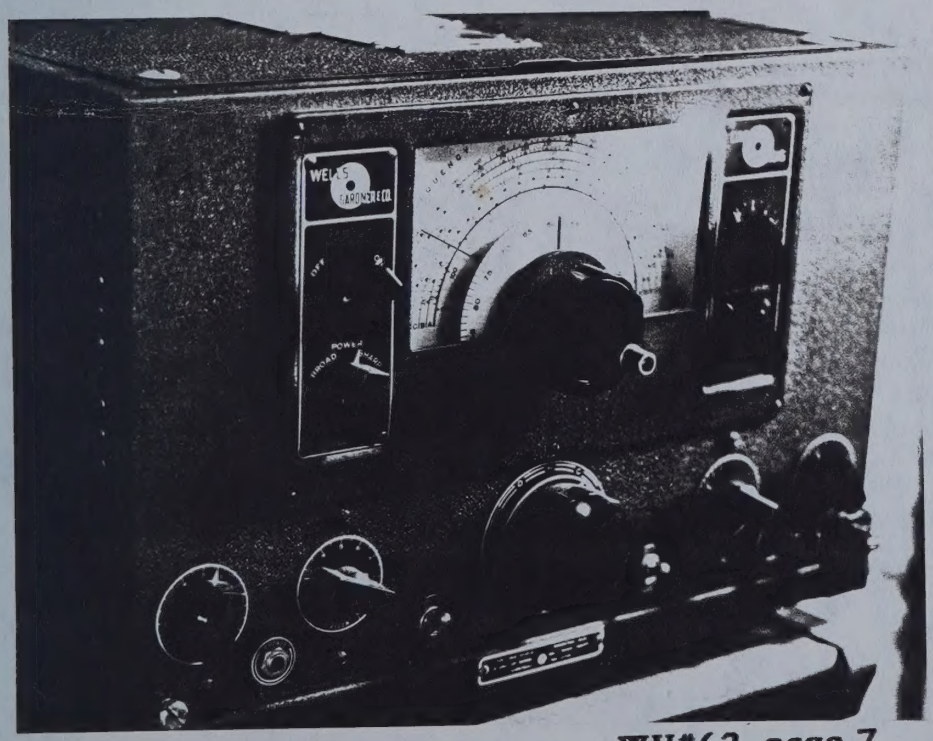

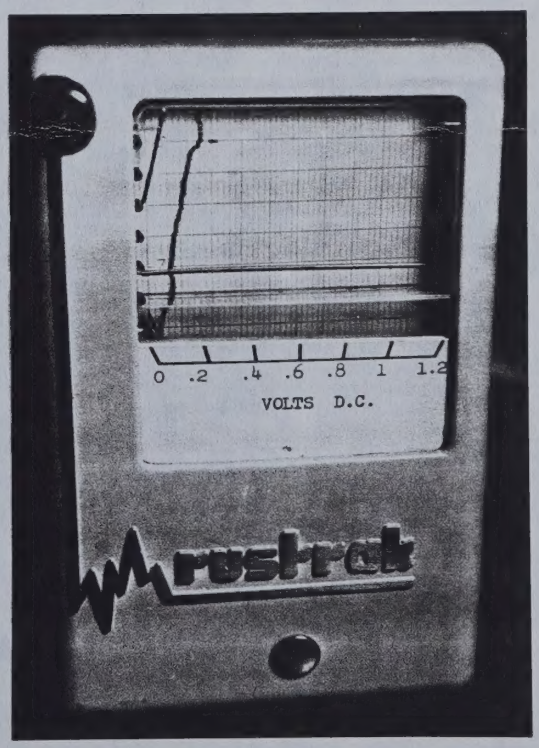

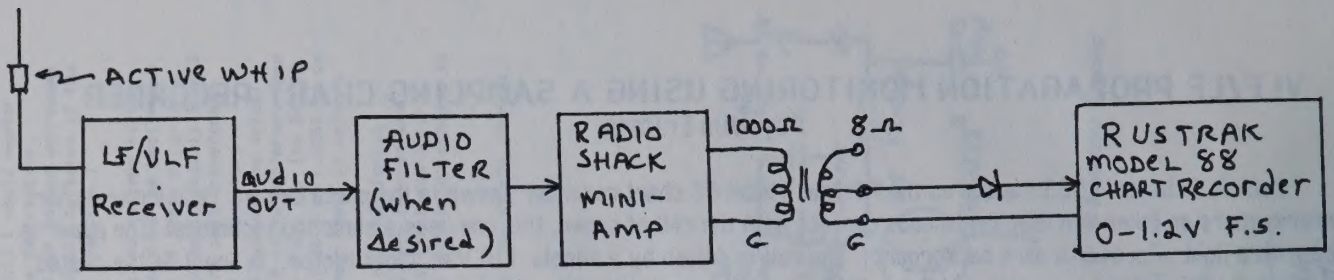

FIG. 1 BLOCK DIAGRAM OF RECEIVE SETUP

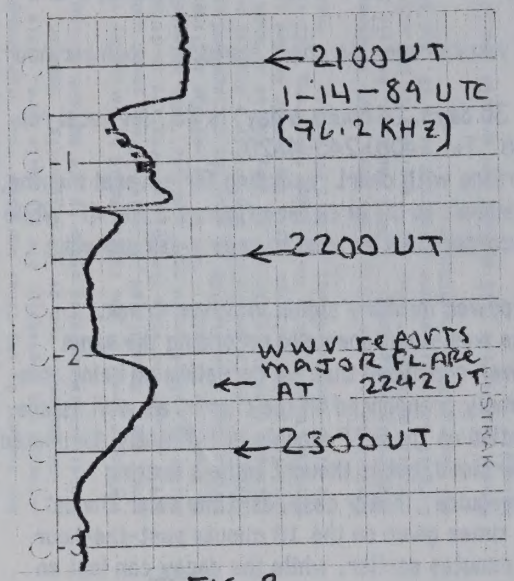

FIG. 2

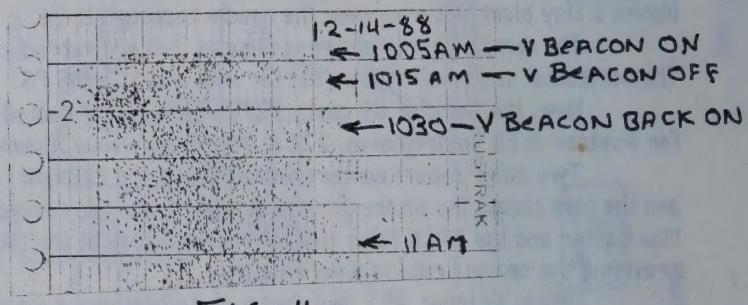

FIG. 4

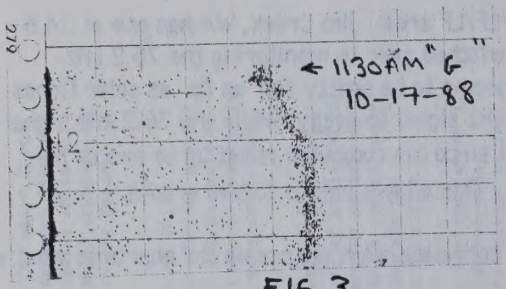

FIG. 3

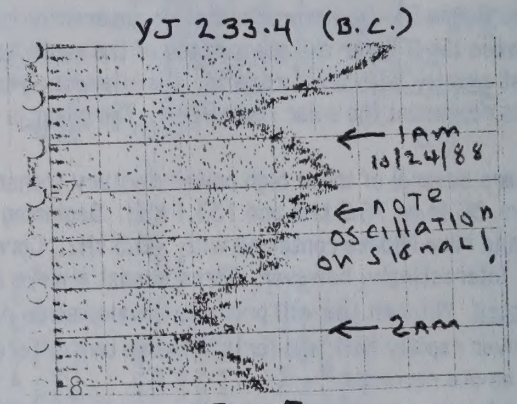

FIG. 5

Fig. 1 Block Diagram of receive setup at EK QTH.

Fig. 2 This is 76.2 kHz (military at Aldergrove, BC). Note the onset of a major solar flare at 2230UT. It peaked about 2242UT (this was confirmed by a later WWV announcement at 18 minutes after the hour). The decay lasted until 2315UT. Note the strong signal line, and the absence of noise compared to the other (much weaker) signals in figures 3, 4, and 5.

Fig. 3 This is a recording of Herb Vanderbeek's "G" beacon, located about 7 miles from my QTH. His ident sends "G" followed by a fairly lengthy space. The signal was coming in QRK 4 at the time. The dark trace at zero volts is the "space". The "G" is the darkish raggedy line slightly above mid-scale. The random dots in between represent the rustrak "hammer" coming down on the meter needle when it was in motion.

Fig. 4 This is the Vanderbeek "V" LowFER beacon in Forestville, CA, about 90 miles north. the QRK level was barely 2 (no possible way to QSO or copy a message). From 10:05AM to 10:15AM the signal is there. At 10:15AM I purposely detuned the receiver slightly so that "V" was no longer in the passband. Then at 10:30AM I retuned on "V". Dits and dahs would each have to be several minutes long, but with patience, a message could be passed using this "sampling" technique.

Fig. 5 This is the YJ NDB on 233.4 kHz coming from British Columbia. The recording was made in the middle of the night. This clearly demonstrates nighttime skywave effects. Note especially the "little" oscillations withing the "big" oscillations.